REV.	ECN NO.	DATE

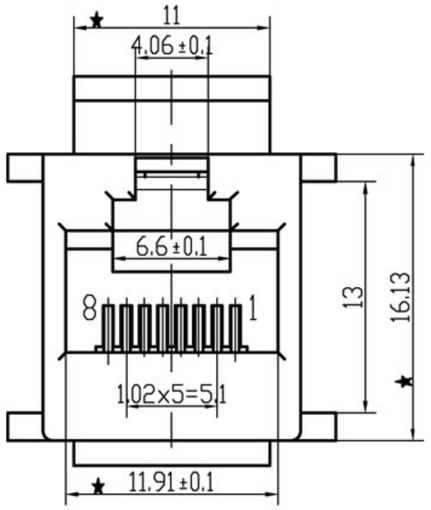

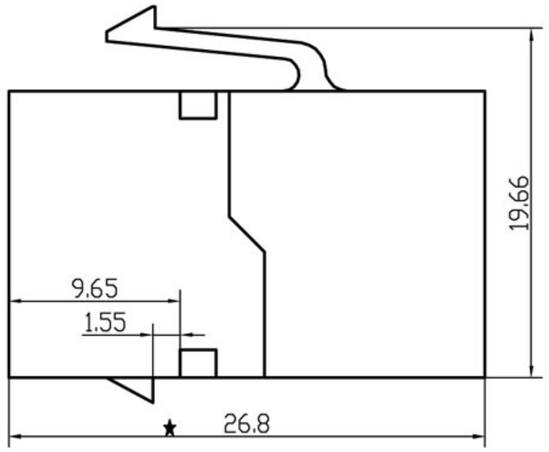

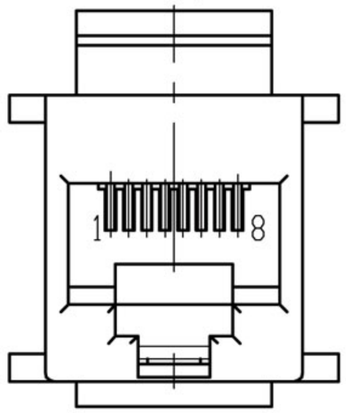

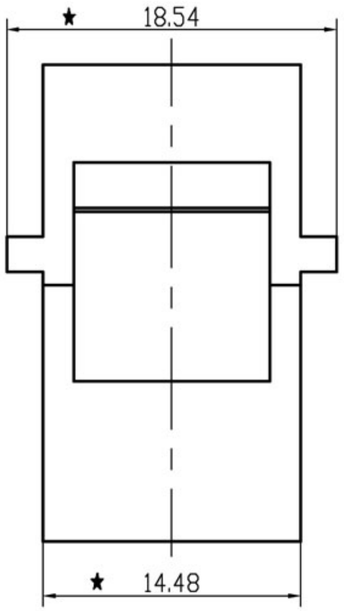

NOTES:

1. ELECTRICAL:
   1.1 VOLTAGE RATING: 125 VAC RMS;
   1.2 CURRENT RATING: 1.5 AMP;
   1.3 CONTACT RESISTANCE: 20 MILLIOHMS Max;
   1.4 INSULATION RESISTANCE: 1000 MEGOHMS Min @500 VDC;
   1.5 DIELECTRIC STRENGTH: 1000 VAC RMS 50 or 60Hz 1 Minute;
2. MECHANICAL:
   2.1 HOUSING: PA66+30%GF, UL94V-0, IVORY;
   2.2 INSERT: PA66+30%GF, UL94V-0, IVORY;
   2.3 TERMINALS: DIA 0.46 PHOSPHOR BRONZE PLATED 3u" Au;
   2.4 DURABILITY: 750 CYCLES Min.
3. "★"Critical Dimension.

RoHS Compliant

					TOLERANCES 0~15±0.15 15~30±0.2 >30±0.25 ANGLES:±1°	MATERIAL: SEE NOTES	Designed:	NAME: KEYSTONE COUPLER(8P)	
FIRST ANGLE PROJECTION	A4 SIZE	SCALE 2.2:1	UNIT mm	CUSTOMER: MODEL NO.:		FINISH: SEE NOTES	Checked:	DWG NO.:	REV
						SHEET 1 OF 1	Approved:	PART NO.:	00