Keystone Patch Panel

(Keystone Jack Unload)

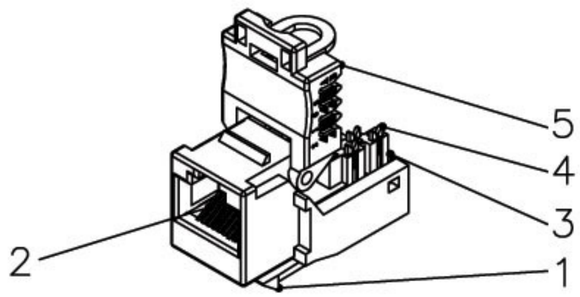

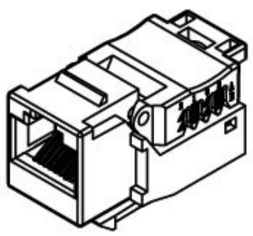

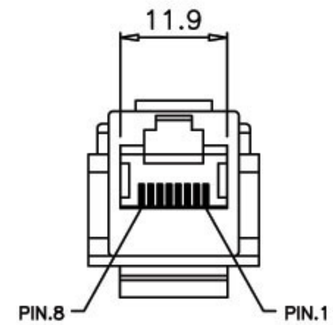

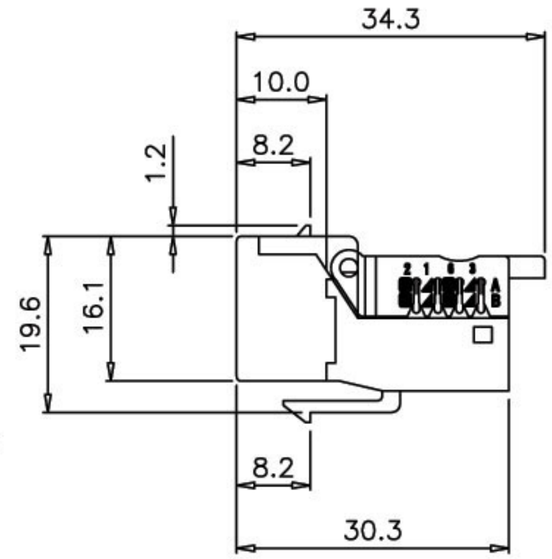

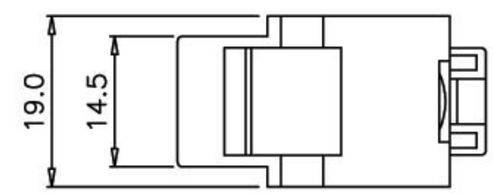

Specification :

Material :
1. Plastic Housing : ABS + PC, UL 94V-0.
2. RJ45 Contact material & finished :
   2-1. Phosphor Bronze with 50-60 micro-inch Nickel plated.
   2-2. Contact area : Min. 3 mm 50 micro-inch Gold plated.
3. IDC Housing : PC, UL 94V-2.
4. IDC Terminal material & finished :
   4-1. Phosphor Bronze with 50 micro-inch Tin-Lead plated over 50-60 micro-inch Nickel plated.
   4-2. Use for 23-24 AWG solid wire, max. wire OD 1.4 mm.
5. IDC CAP : PC, UL 94V-2.

Performance :
a. The IDC color codes combine two wirings of T568A & T568B.
b. Insertion Force : 900 gms for 8 contacts.
c. Retention Strength : 7.7 kgs between Jack and Plug.
d. Operation Temperature : -40°C to 80°C.
e. Durability :
   e-1. Jack : 750 cycles Plug-Jack mating and unmating test, insertion cycles at 20 cycles/minute max. Contact resistance test per 100 cycles.
   e-2. IDC : Max. 200 punching times.
f. The Cat.5e performance is in compliance with the ANSI/TIA/EIA 568 B.2 standard.

GENERAL TOLERANCE OF DIMENSIONS	DRAWING	08.MAR.2004	Nick	Kai Turn Enterprise Co., Ltd.
X.XXX ±0.005 X.XX ±0.05 X.X ±0.1	CHECK	08.MAR.2004	YTY	
	APPROVAL	08.MAR.2004	Magic	
		DATE	NAME	ITEM NO.: KTKJJ-UVTL
	SCALE 1/1 (A4)	UNIT	mm	DES.: CAT.5e Unshielded, Toolfree
	DRAWING NO. KTKJJ-UVTL			
	DRAWING CLASSIFICATION	S	SHEET 1 OF 1	A1

Part No. KTKJJ-UVTL